Stuff-Your-Stuff Platform Bed (Twin and Full)

Pre-Assembly:
- Please read all instructions before beginning assembly.
- Assembly by two people is a must.
- Save all packing materials until assembly is complete to avoid accidentally discarding smaller parts or hardware.

Tools Required:
Phillips head screwdriver (not included)

Parts Included:

Carton 1:

- (1) Headboard – A

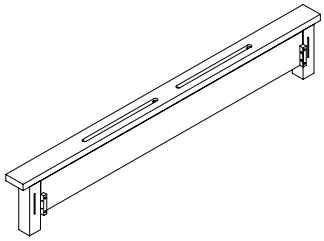

- (1) Footboard – B

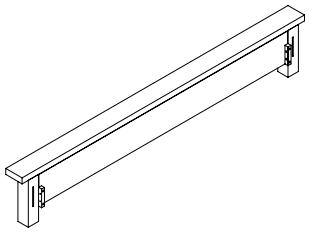

Carton 2:

- (2) Side Rails – C-D

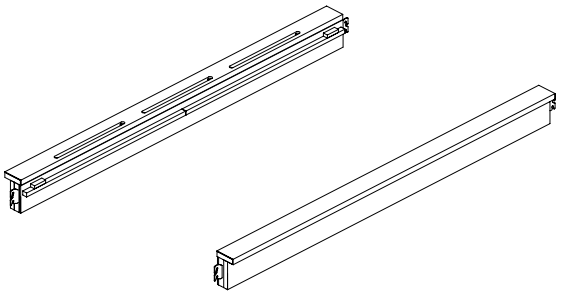

- (1) Slat Roll – E

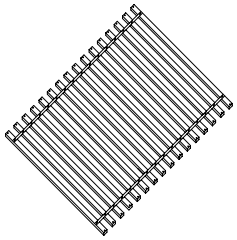

- (5) Wood Plug – F

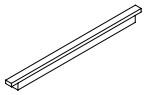

Hardware Included:

- (32) Wood Screws (M4 x 1”) – G 

Assembly Instructions:

1. Insert 2 Side Rails (C-D) into Headboard (A) and Footboard (B) by locking the teeth into grooves.
2. Place slat roll (E) onto the Side Rails (C-D). Position the two end slats at the end position of the side rails. Secure Slat Roll (E) to Side Rails (C-D) with Wood Screws (I).
3. Cover the holes on Headboard and Side Rail with Wood Plugs (F).

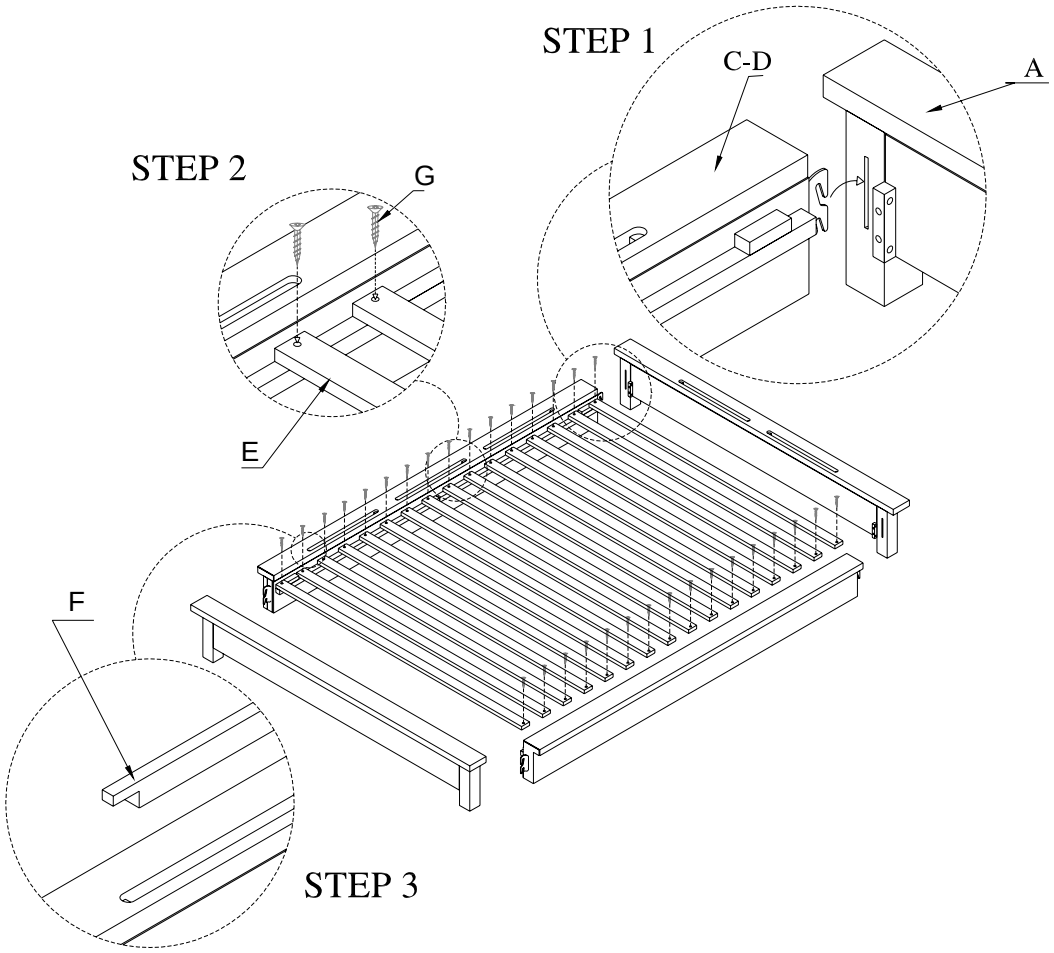

Care Instructions:

- Dust often with a soft, dry cloth.
- To clean, slightly moisten cloth with water (a damp cloth will hold dust and prevent scratching; dry thoroughly).

Stuff Your Stuff Plasma Footboard

CAUTION

The top shelf of this cart/stand is intended for use with:
Plasma/LCD/DLP/HD televisions having a maximum screen size of 37 inches and weight of 80 lbs.
All other support shelves should not be loaded more than 25lbs.

DO NOT EXCEED RECOMMENDED LOAD. Use with products heavier than the maximum sizes and weights indicated may result in instability causing possible injury.

This unit contains a permanent sticker located on either the item or inside the center compartment.

Do not allow children under 16 years to move the product.

Pre-assembly:
Please read all instructions before beginning assembly.
Two-adult assembly is recommended.

Parts Included:
Hardware Enclosed:

A - Footboard - 1 pc
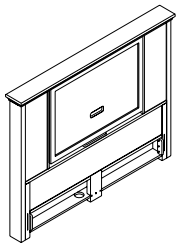

Allen Bolt and Washers - 8 set (Pre-screwed)
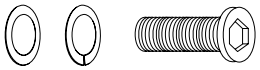
Allen Key - 1 pc


Needed for Assembly: Stuff Your Stuff Platform Bed (not included)

Needed for Mounting the Plasma TV: Wall Mount Bracket and Wood Screws (not included)

Assembly Instructions:
Assemble the bed frame per the manufacturer's instructions. Connect the Footboard (A) to the bed frame by joining the bed frame's side rail hooks with the female connector hooks of the Footboard (A). See Figure 1.

Figure 1: Attach the bed frame to the Footboard (A).

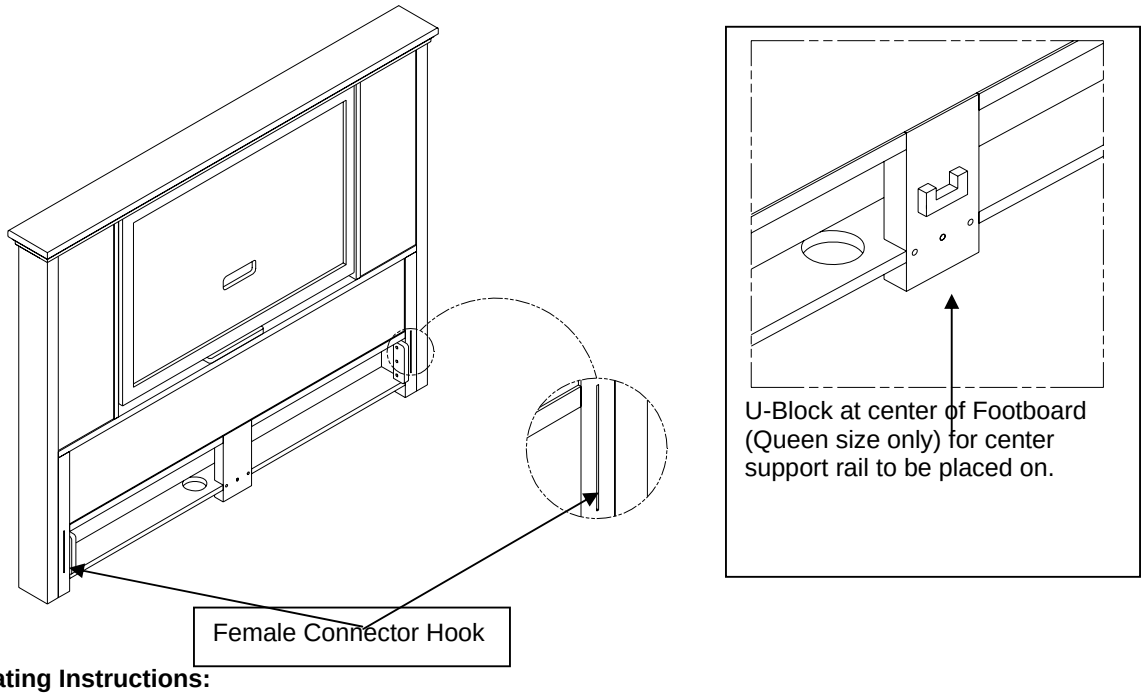

Operating Instructions:

1. The center compartment, with the one side cut out, is the place for mounting a Plasma TV.
2. This center component can turn half-way round and one way only. Slowly turn the center component until the pre-attached magnet at the bottom of it engages with the other magnets on the stopper wood rail below.

Figure 2: Center Compartment.

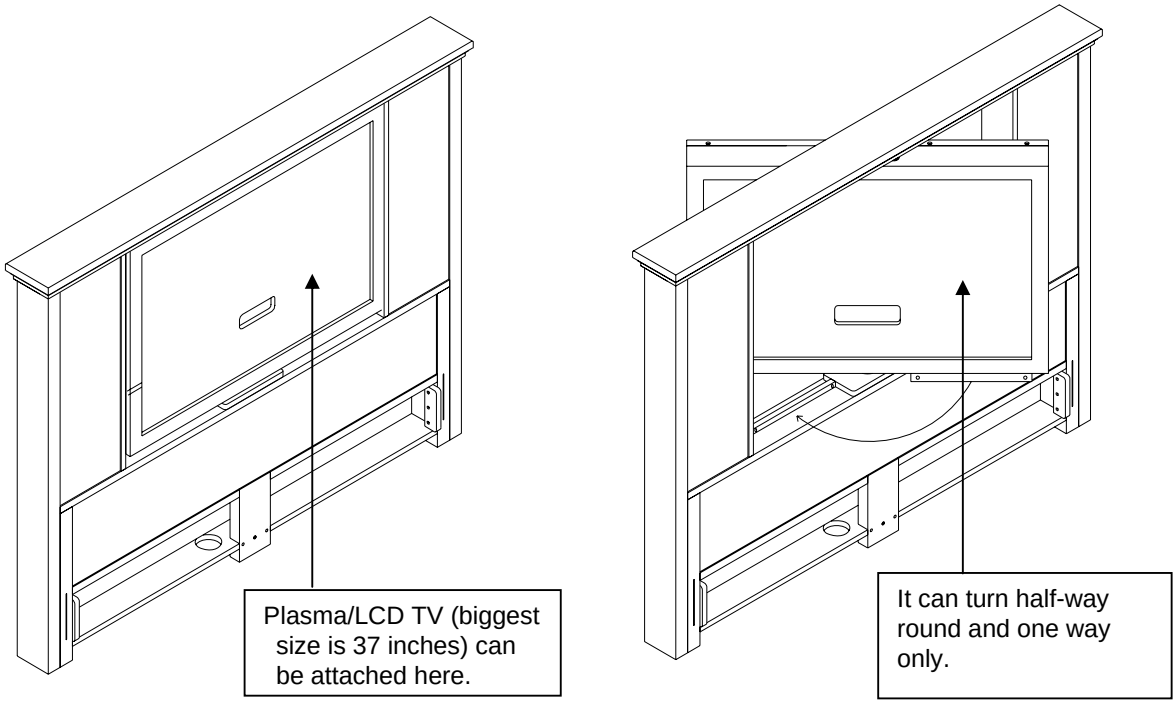

3. The cork panel at the other side of the center compartment can be removed for cabling when a Plasma TV is attached on the front side. The cork panel is pre-attached to the center compartment with Allen Bolts. Use the Allen Key to turn the Allen Bolts to remove or attach the cork panel.

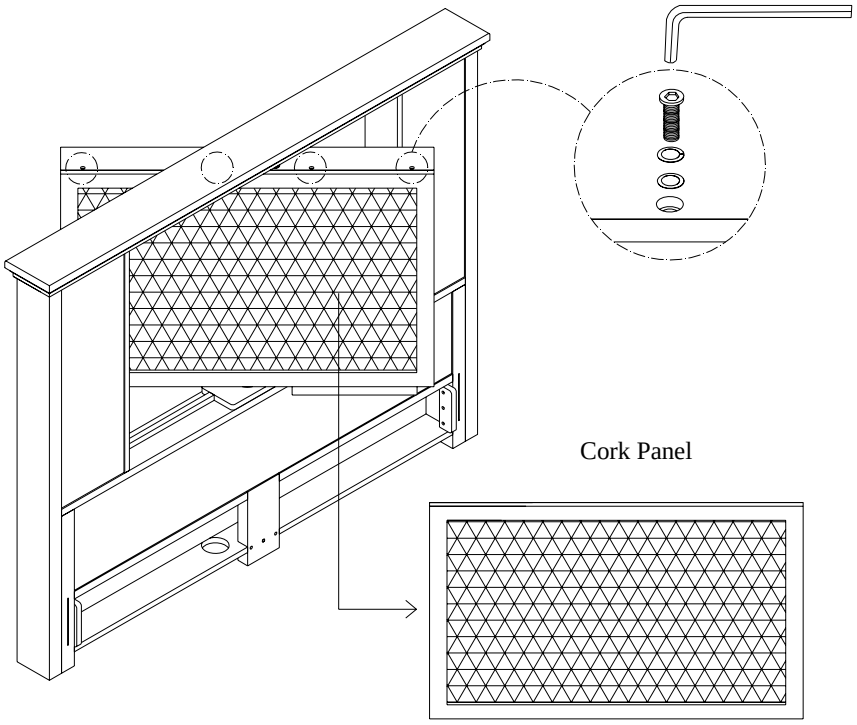

Use an Allen Key to turn the Allen Bolts (4 on top and 4 at bottom of the center compartment) to detach or attach the cork panel.

Cork Panel

4. When the cork panel is removed, it will provide the space needed for mounting the Plasma TV on the front side and performing the cable work. **Note:** A mounting bracket (not included) is required for mounting the Plasma TV to the Footboard (A). Please ensure the mounting bracket fits with your TV and works within the panel rotation.

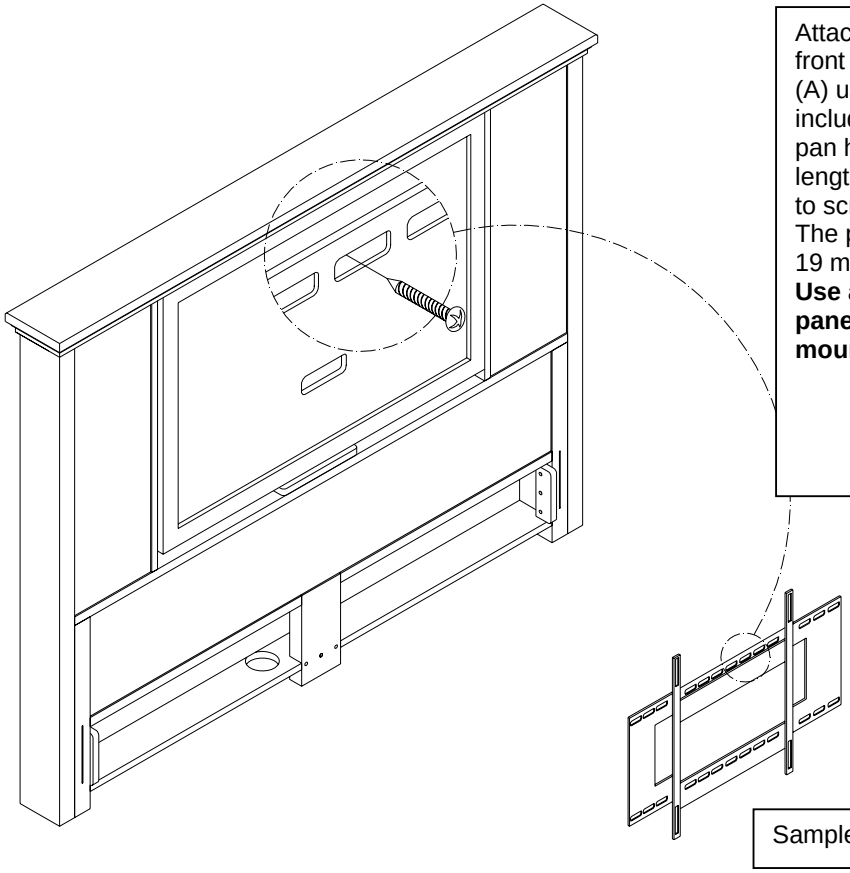

Attach the wall mount to the front panel of the Footboard (A) using wood screws (not included). We suggest using pan head screws with a length of about 1-1/4 inches to screw through this panel. The panel has a thickness of 19 mm.
Use a pencil to mark the panel to make sure the tv mounting bracket is level.

Sample Wall Mount Bracket

Note:
If you found any difficultly in mounting the bracket, contact the dealer for support.

5. Hang the Plasma TV on the mounting bracket. Usually, this involves attaching rubber/plastic mounts to the back of the TV (please check your mounting hardware manual), placing them through holes in the mount, and letting it settle into place.

Double check the stability of the TV to make sure it is firmly attached.

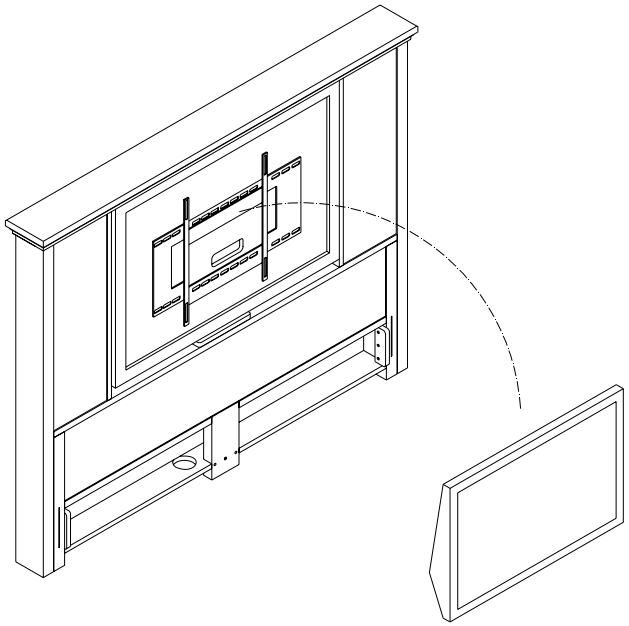

Sample Plasma TV

6. The turning tube that sits below the center compartment and helps the center compartment turn is also the way for the cabling. Run the cables through the cut-out on the bottom of the center panel and string them down through the tube. Continue stringing the cables down to the bottom rail of the Footboard (A) and then connect to the power and signal supply.

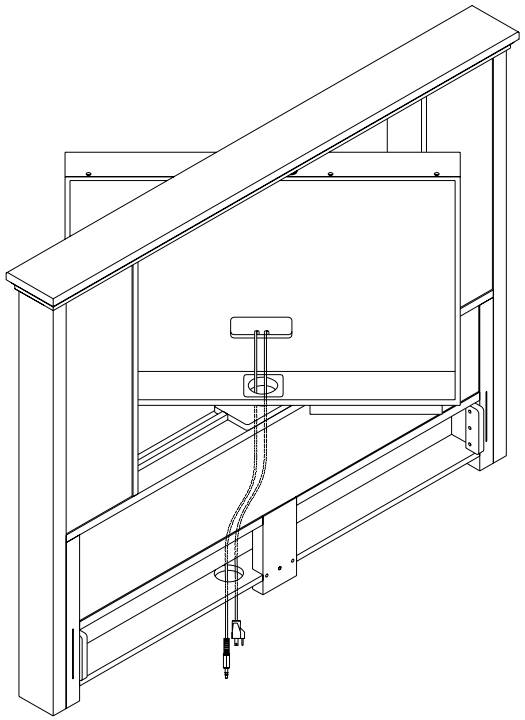

Inside the Center Compartment (view from back side when the cork panel has been removed) is the place for cabling work. The cables can go through the turning tube to the floor, as shown.

7. Repeat step 3 to re-attach the cork panel after the cabling work has been completed.

Care Instructions

1. Spot clean with damp cloth.
2. Cleaning agents should not be used.
3. Electrical shock hazard may cause death or serious injury. Avoid the Plasma TV and unplug the cable from the power supply before cleaning.
4. Periodically check again the mounting bracket and the Plasma TV to ensure they are still firmly attached.

Stuff-Your-Stuff Backrest

Parts Included:

A - Backrest – 5 pcs

Assembly Instructions:

4. Remove the wood plugs covering the holes in the headboard, footboard and side rails of the Stuff-Your-Stuff Platform Bed.
5. Insert each Backrest (A) into the holes. Push down for proper attachment.

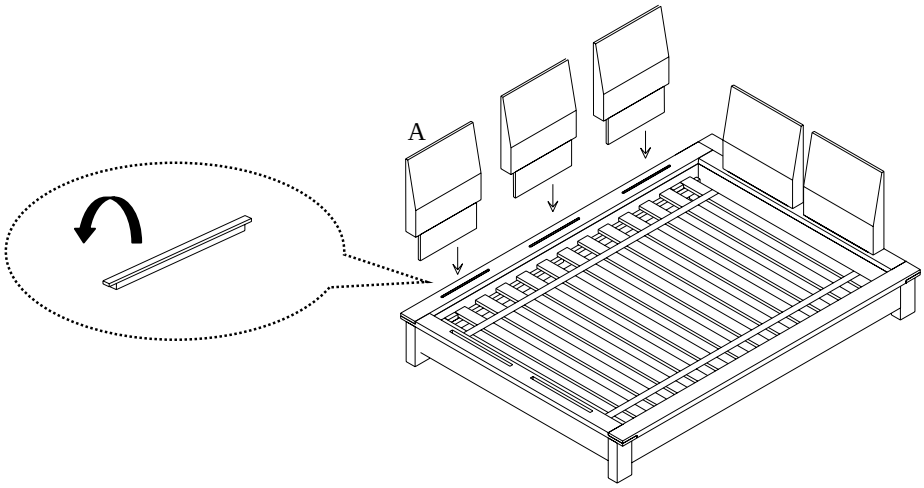

Care Instructions:

- Dust often with a soft, dry cloth.
- To clean, slightly moisten cloth with water (a damp cloth will hold dust and prevent scratching; dry thoroughly).
- **NOTE:** Backrest cushion covers are removable and feature a hidden zipper closure.
- To wash covers, remove from backrest by unzipping along the seam.
    - Covers: Machine wash warm, gentle cycle. Only non-chlorine bleach when needed. Tumble dry low. Warm iron as needed.
    - Insert: Spot clean only with a damp white cloth. Blot to remove excess water. Air dry.